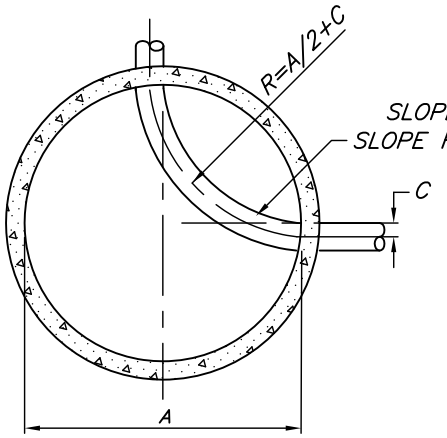

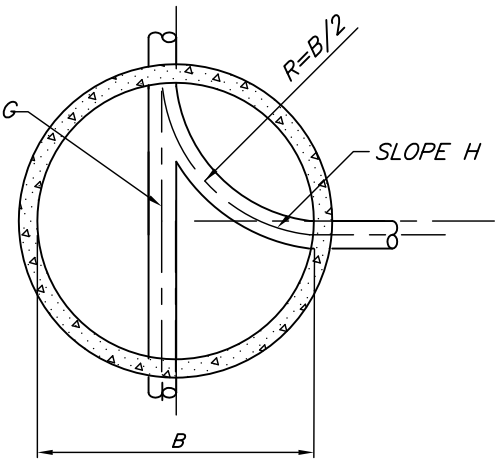

WHEN A SMALLER SEWER JOINS A LARGER ONE, THE TOP OF PIPE SHALL BE MATCHED AT THE SAME ELEVATION.

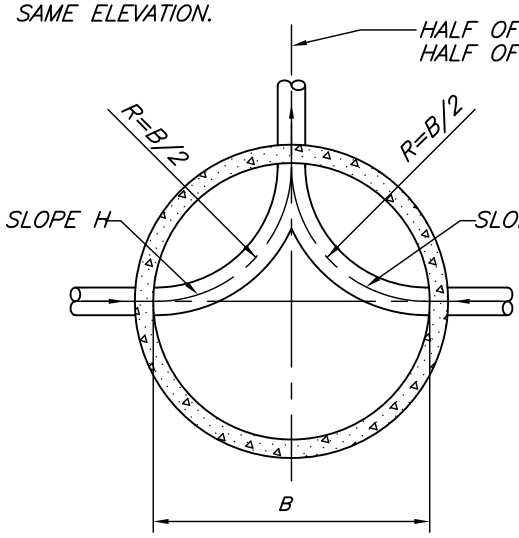

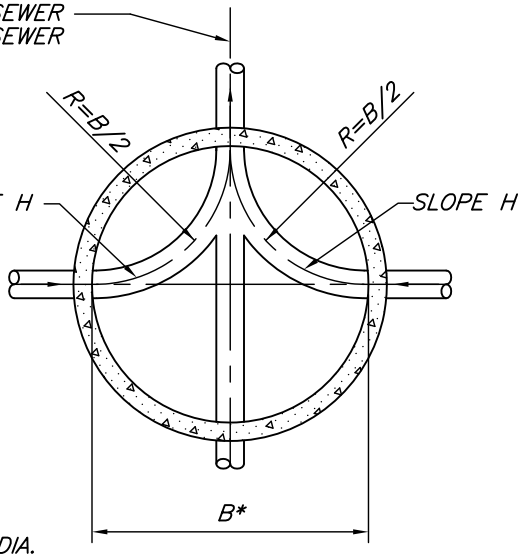

* FOR PIPE DIAMETERS GREATER THAN 24" DIA. DESIGN ENGINEER SHALL PROVIDE SPECIAL DESIGN DETAILS SHOWING MANHOLE SIZE, MATERIAL, INVERT, BENCH WALLS, & ANY OTHER PERTINENT FEATURES FOR TOWN ENGINEER APPROVAL.

MAX. PIPE DIA.		8"	12"	15"	18"	21"	24"	27"	30"	36"
DIMENSION	A	4'-0"	4'-0"	4'-0"	4'-0"	5'-0"	5'-0"	5'-0"	6'-0"	*
	B	4'-0"	5'-0"	5'-0"	5'-0"	5'-0"	*	*	*	*
	C	4"	6"	8"	9"	10"	12"	13.5"	15"	18"
	G	.05'	.05'	.02'	.02'	.02'	.02'	.02'	.02'	.02'
	H	.10'	.10'	.05'	.05'	.05'	.05'	.05'	.05'	.05'

STORM SEWER STANDARD MANHOLE DIMENSIONS

N.T.S.

ISSUE DATE: AUGUST 2012

REVISIONS	
DATE	COMMENTS

TOWN OF BATAVIA

HIGHWAY & STORM SEWER DETAILS

STORM SEWER STANDARD MANHOLE DIMENSIONS

DRAWING HS-15